Design and Development of an Electric Toy Car Powered by a Fuel Cell Stack

Team members:

BME: YIP Tsz Yeung Oscar 22077083D

EEE: SEN Bijoy 22097037D

ME: ZHAO Xuecen Jack 22014303D

Supervisor: Prof. AN Liang

Teaching Assistant: LONG Xin

Date: 28 Nov 2025

Outline

1. About us
2. Background
3. Introduction
4. Objectives
5. Current progress
   - The mechanical system
   - The power system
   - The control system
6. Plan for next semester

About us

BME

YIP Tsz Yeung Oscar

- Diagnosis analysis
- Data analysis
- Assembly of toy car
- Car performance test

EEE

SEN Bijoy

- Assembly of the toy car
- Collecting sample data
- Power management for the fuel cell
- Test out AI model

ME

ZHAO Xuecen Jack

- Design the fuel cell stack.
- Assembly of the toy car.
- Build and Train the AI model
- Large Language Model deployment

About us

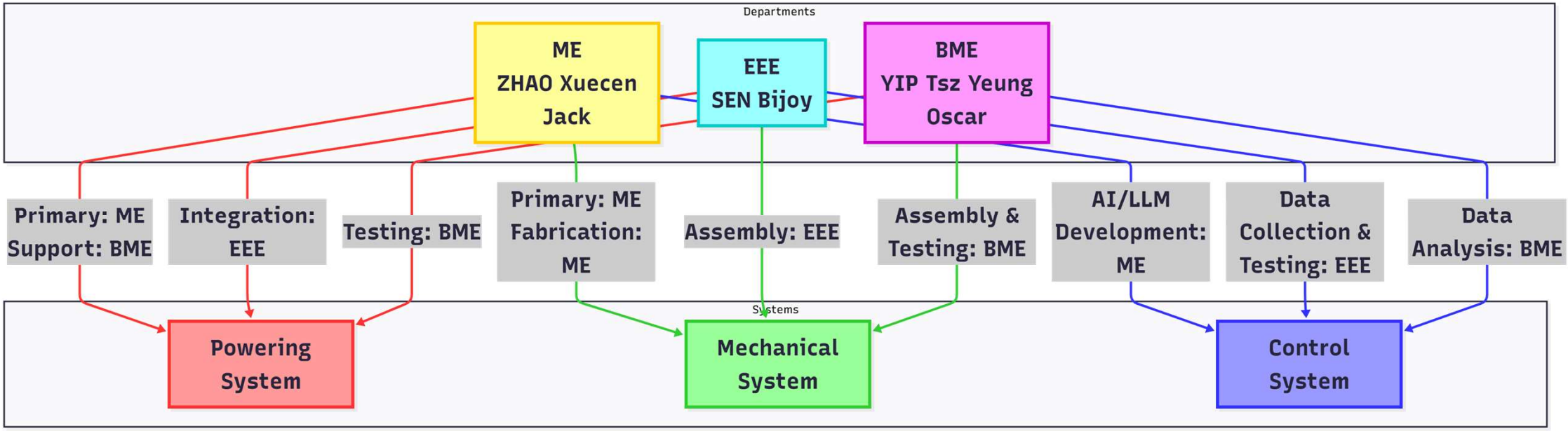

Fig 1 Work division of the project

Background

Traditional car

- Fossil fuel car loss energy in alternator during electricity generation (Mekhilef et al., 2012)[6]
- Electric vehicles are slow to recharge and need to compromise between charge speed and life cycle (Das et al., 2020)[2]

Car powered by fuel cell stack

- Generate electricity directly hence no mechanical conversion losses
- Near-instantaneous refueling (Shi et al., 2021)[9]

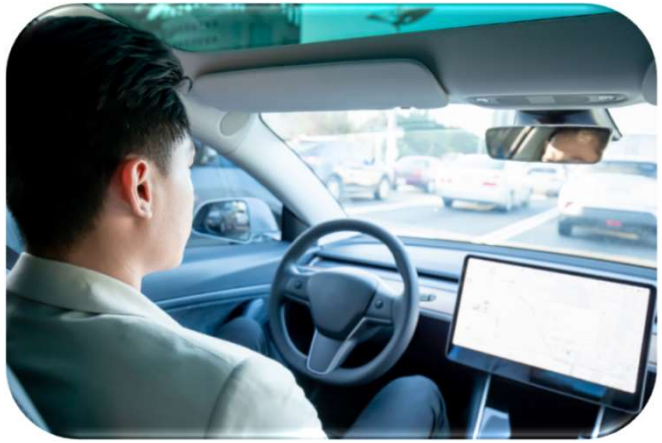

Fig 2 Autonomous driving

Fig 3 Waiting for EV to charge

Background

Environmental impact and safety

- Fossil-based transport is a major source of greenhouse gas emissions
- Lithium batteries has limited lifecycles and difficult to recycle
- Traditional cars (Electric and fossil fuel) are prone to explosion or ignition when impacted. (Wang et al., 2022)[8]

Car powered by Vanadium fuel cell stack

- Low greenhouse gas emission
- Long charge-discharge cycles
- High recycle rate
- Does not burn or explode

Fig 4 Environment

Introduction

Vanadium Fuel Cell Powered Autonomous Car

- Autonomous toy car named Vandi
- Powered by a vanadium redox flow battery.
- Equipped with LiDAR and a depth camera for navigation.

Demonstration

- Chat interface for user interaction and command execution.
- Aims to showcase sustainable energy + AI integration.

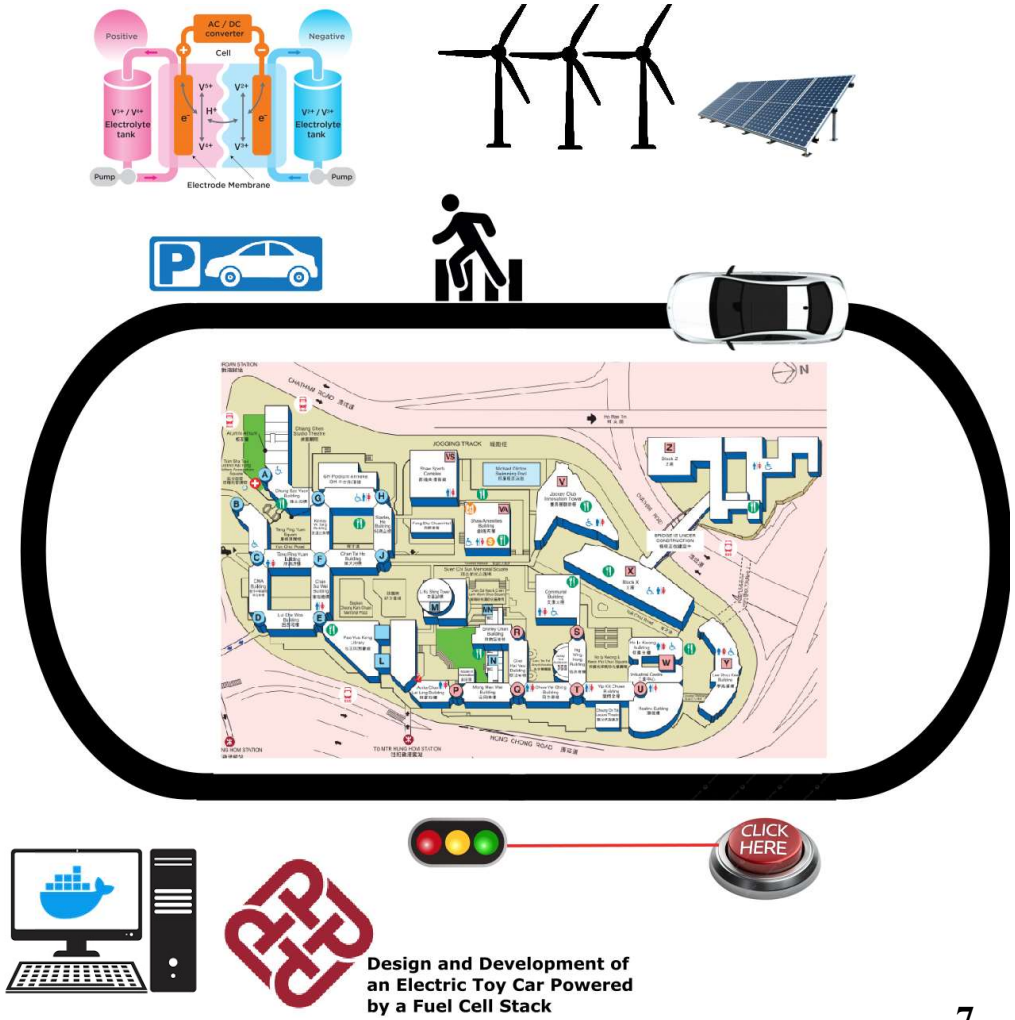

Fig 5 Project outcome

Objective (Car and AI)

Toy car:

- Build a mecanum wheel car
- Integrated with sensors for navigation

AI & Software:

- AI model that handles object detection achieving >80% confidence (AranaCorp, 2024)[1]
- Able to drive around the map shown on the right automatically
- Interactive chat interface for demonstration

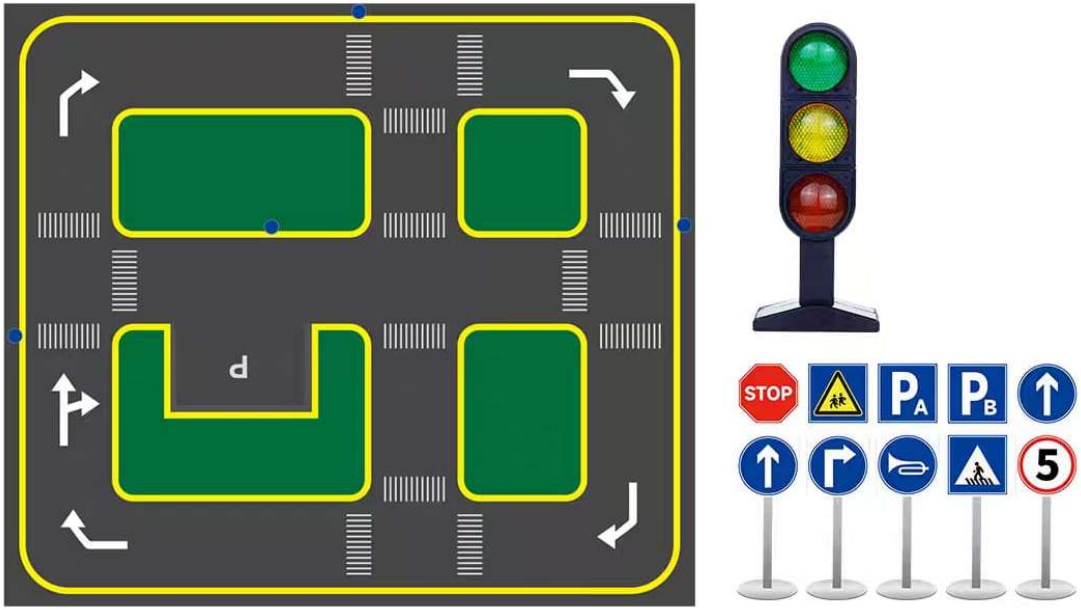

Fig 6 Map and traffic sign/light for the car demonstration

Objective (Fuel cell)

Performance:

- 1.4V open-circuit voltage
- 2.5A max current
- 2.0W peak power
- 10 minutes run time
- No leak

Design:

- Modular
- Stack build friendly
- Easy refuel system

How:

- Rapid prototyping with 3D printing
- Leak and corrosion test
- Use COMSOL or ANSYS for computer simulation

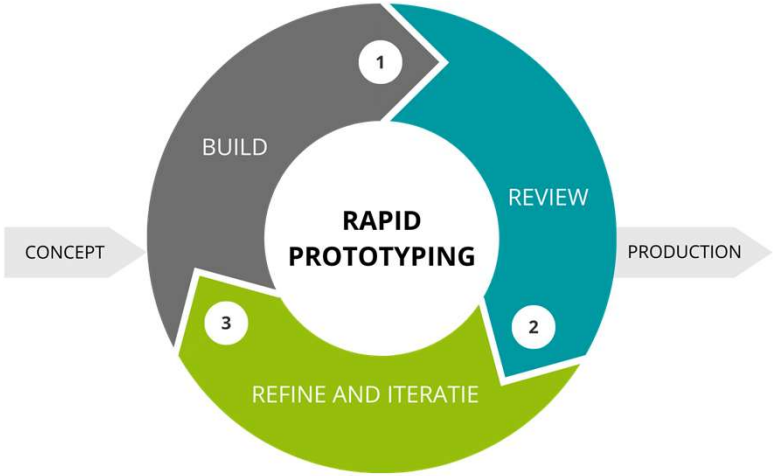

Fig 7 Rapid prototyping

Fig 8 3D printer at IC maker's lab

The operational flow of our fuel cell car system

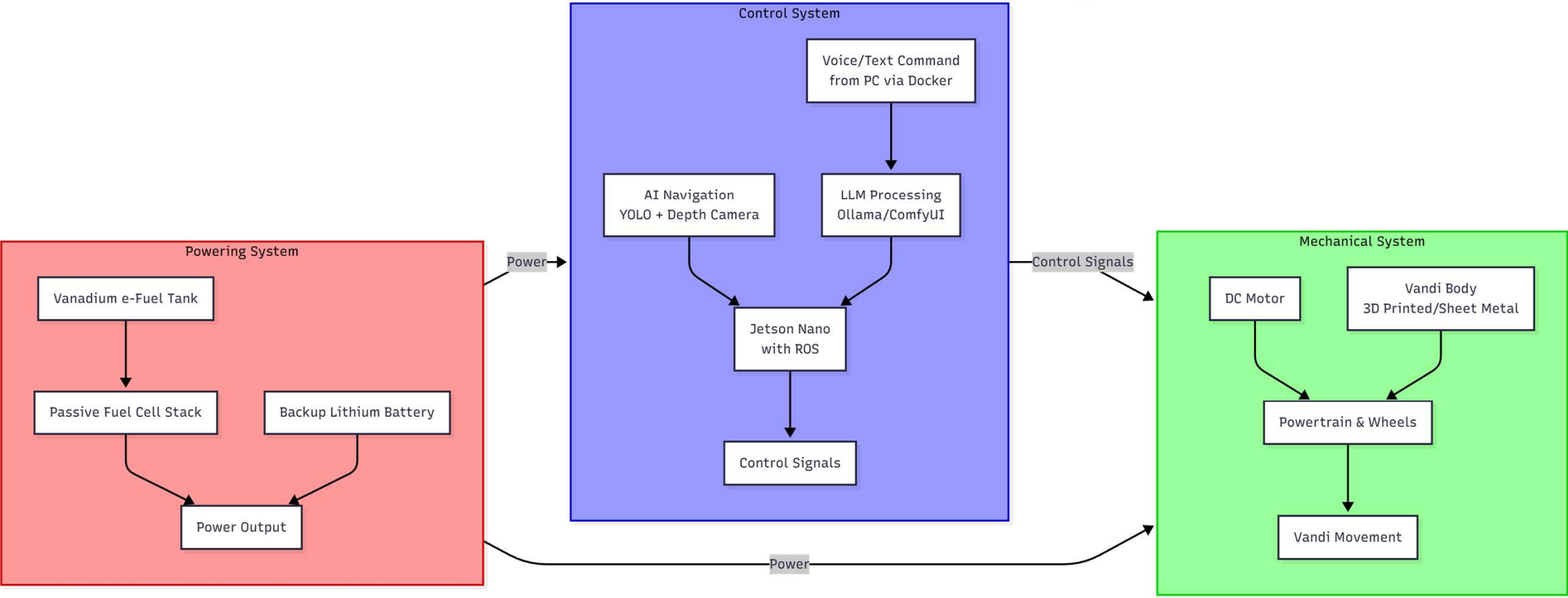

Fig 9 operational flow of our final product

Current progress

Progress overview

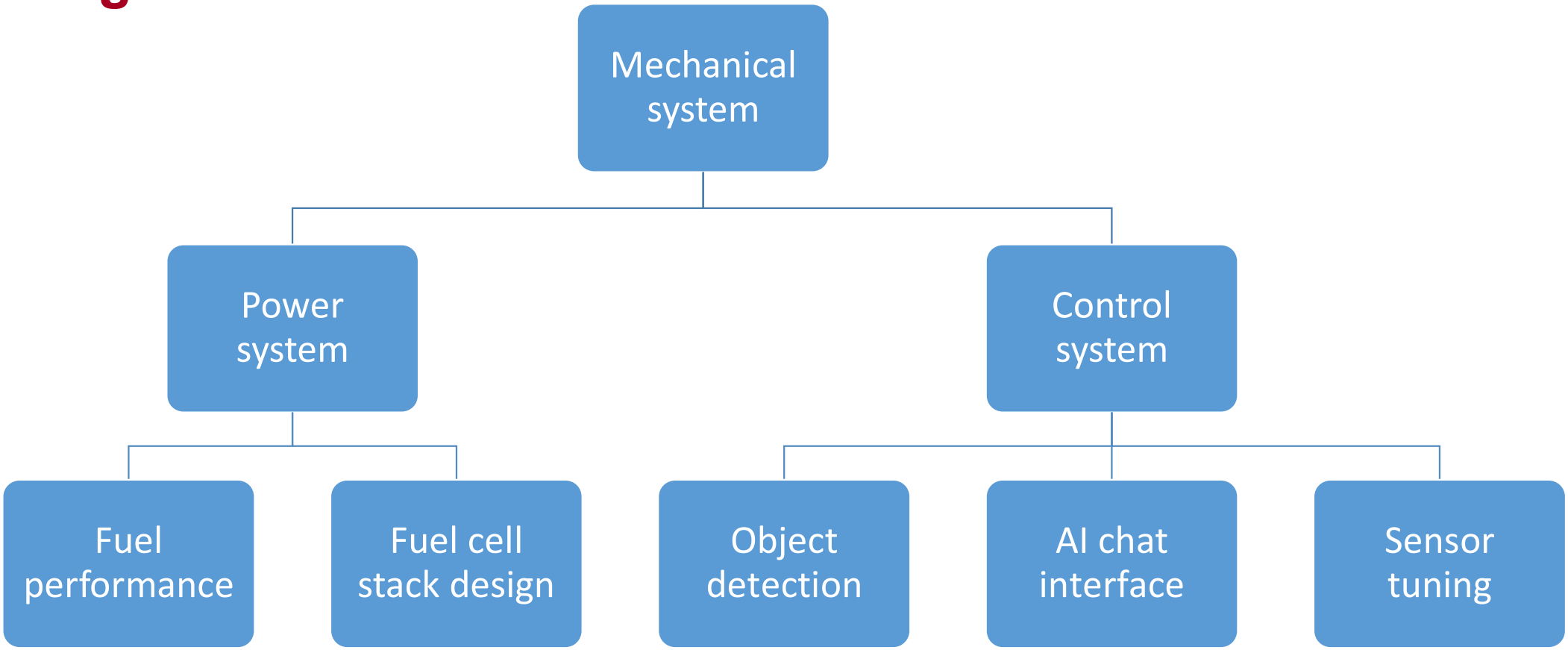

CAD of Vandi

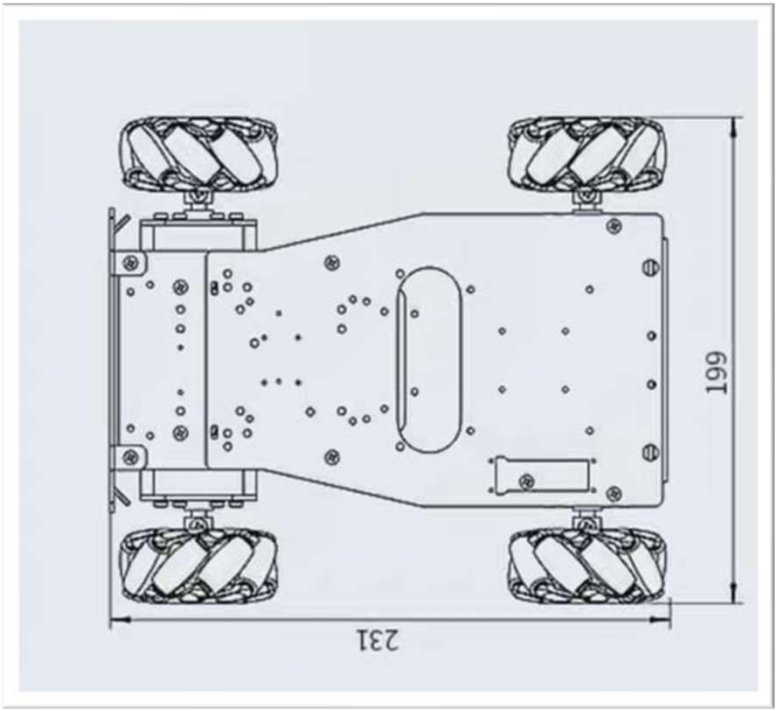

Fig 10 Dimension provided by the car manufacture

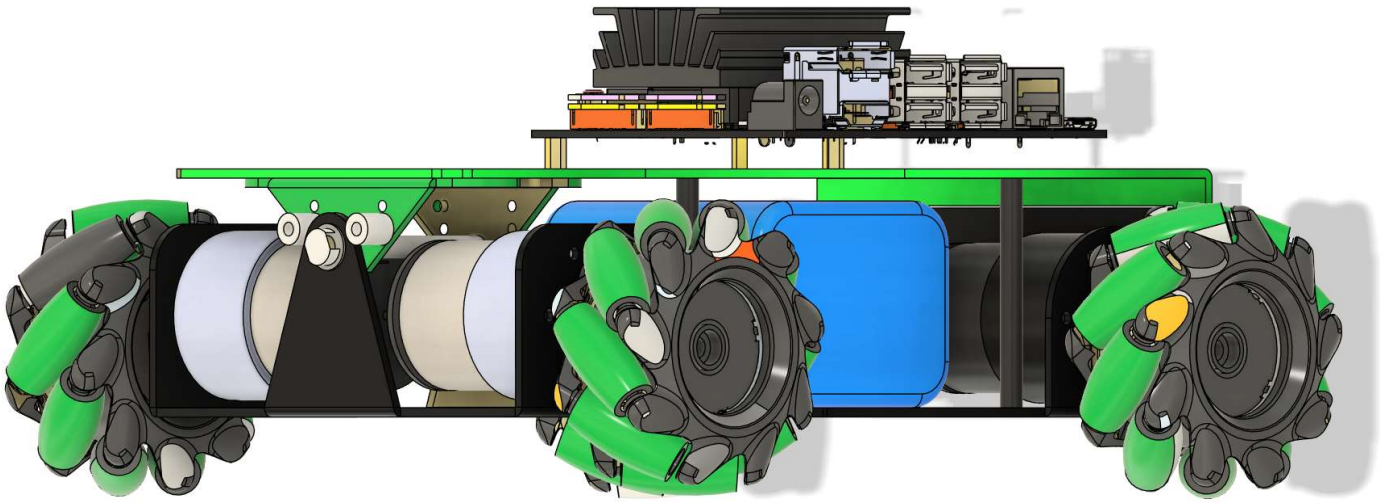

Fig 11 CAD model provided by the car manufacture

Mechanical system of Vandi

Fig 12 Purchased car parts

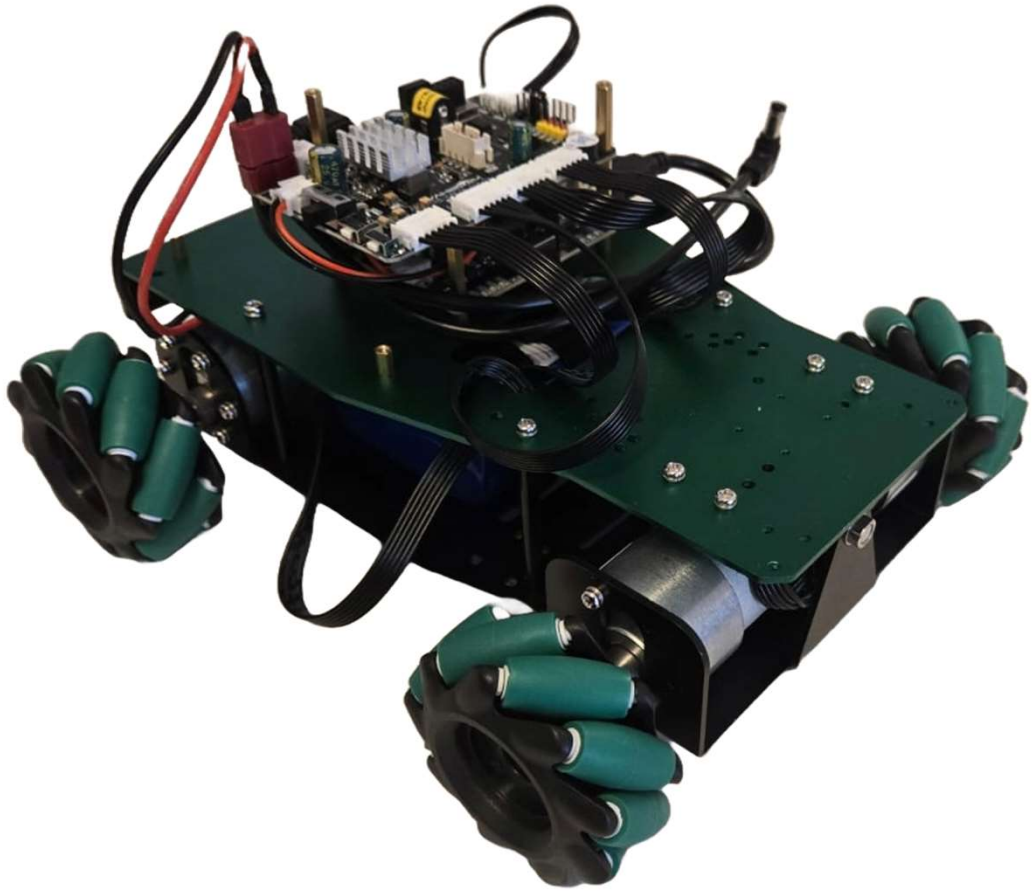

Fig 13 Car assembly

Vandi in action

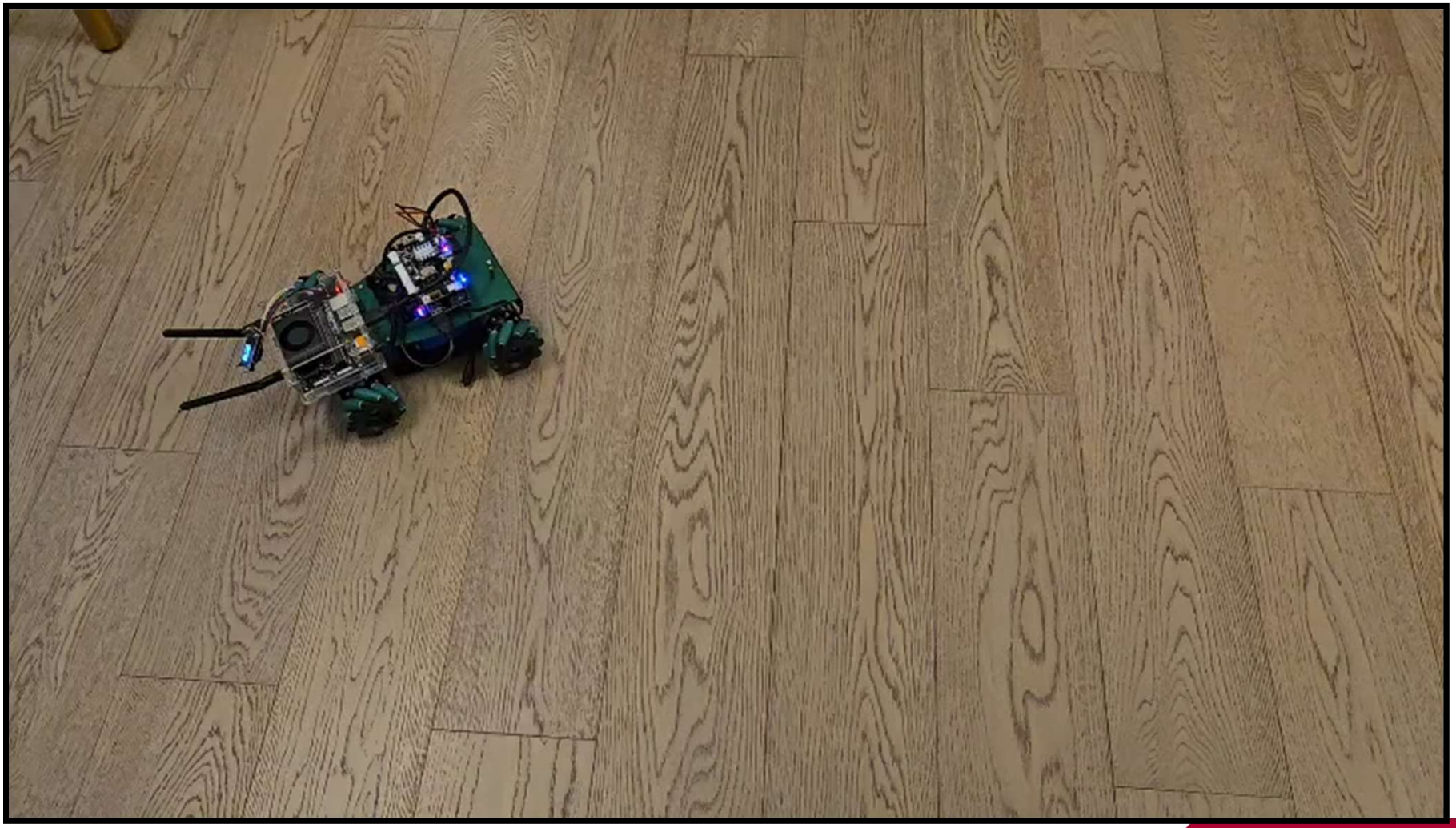

Video 1 Toy car with remote control

ZHAO Xuecen Jack 22014303d

Sensors

Depth camera (left): to detect distance and object color

LiDAR (right): for obstacle detection and mapping.

These sensors will be integrated into our car to achieve auto driving

Fig 14 Sensors we bought